Sagnac Effect

E. J. POST
Air Force Cambridge Research Laboratories, Bedford, Massachusetts

A revived interest in the Sagnac effect has recently resulted from the development of the self-oscillating laser version of the original Sagnac interferometer. The Sagnac interferometer or ring laser is an example of an electromagnetic sensor of absolute rotation, so historical and theoretical background information is useful in evaluating the possibilities of electromagnetic sensing of absolute rotation. A critical literature study of the many experimental ramifications and the older kinematical theory of the effect is presented. This geometric optical theory is then complemented and compared with more recent work that is based on a physical optical analysis using a complete electromagnetic description of the phenomenon.

CONTENTS

I. Absolute Motion versus Relative Motion 475
II. Sagnac-Type Experimentation 476
III. General Aspects of the Theory 479
IV. Geometric Optical Theory 481
A. The Moving Ring Interferometer with Comoving Medium 483
B. The Moving Ring Laser with Comoving Medium 484
C. The Moving Ring Interferometer and Ring Laser with a Stationary Medium in the Beam Path 484
D. The Stationary Ring Interferometer and Ring Laser with a Moving Medium in the Beam Path 484
E. Two Formulas for Ring Lasers 484
F. Consistency Checks 485
V. Physical Optical Theory 486
A. Constitutive Relations and Maxwell Equations ... 486
B. Constitutive Relations for Rotating Systems 488
C. The Wave Equations 490
VI. Summary 492
Acknowledgments 492
Appendix 492
Bibliography 493

I. ABSOLUTE MOTION VERSUS RELATIVE MOTION

An observer enclosed in a "black box" has no way of telling whether his box is in uniform translational motion. A state of uniform translational motion can be established only by visual observation of the change of position of the box with respect to other objects. This requires that the observer extend his observation outside the black box. We define the "black box" as an enclosure which does not permit physical observations outside itself. Observations made inside the enclosure are called "intrinsic." There are no intrinsic physical means, either mechanical or optical, of detecting a state of uniform motion of the box.

The physical equivalence of all uniform translatory motions establishes a set of equivalent space–time frames of reference known as inertial frames. These are in relative motion with respect to each other and are mutually related by Lorentz transformations. Conversely the Lorentz group determines the set of all inertial frames. The Lorentz group thus expresses a space–time symmetry: free space exhibits the same physical properties with respect to all inertial frames.

The space–time symmetry defined by the Lorentz group is comparable with the crystal symmetry defined by the crystallographic groups except that the crystal groups are discrete and represent purely spatial symmetries. The physical properties of a crystal appear the same with respect to the discrete set of frames permitted by its crystal symmetry group (Neumann principle). Analogously free space appears the same with respect to the continuous set of inertial frames related by the Lorentz group.

Any frame of reference that is not an inertial frame is in some way an "accelerated" frame. The acceleration is observable inside the box as a mechanical force field. The presence and the nature of a mechanical force field inside the box enable us to establish in what respect the space–time frame of the box deviates from an inertial frame, without observation of external objects.

The force field in the box can be of a gravitational or of a "kinematical" origin. It is, in principle, possible to distinguish between the two force fields by intrinsic means. A box at rest on the surface of a stationary (nonrotating) earth is subject to a purely gravitational field, the force lines converging towards the center of the earth. A box on the periphery of a rotating disk also exhibits an internal force field the lines of which diverge from the axis of rotation. An observer moving inside the box that is on a rotating disk is in addition subject to a Coriolis force. The Coriolis force is absent in the case of a purely gravitational force field. A linearly accelerated motion does not give rise to a Coriolis force. Its lines of force converge to a point at infinity instead of towards a finite point as would be the case for a gravitational source.

Thus the nature of the acceleration at a point inside the box can be established by exploring the neighborhood of that point. Fock calls this the distinguishability in "the large" of acceleration and gravitation [Fock (1959), p. 208]. A state of kinematical acceleration is thus associated with a state of absolute motion with respect to all inertial frames.

Very sensitive devices have been developed for measuring acceleration fields mechanically. The pendulum is used to measure the earth's gravitation; the Foucault pendulum can be used to measure the earth's rate of rotation. Linear accelerations can be measured by a differential frequency shift of loaded vibrating

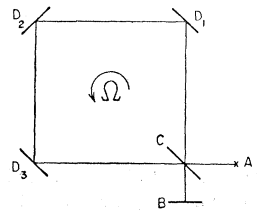

FIG. 1. Schematic of Sagnac's interferometer. A = light source; B = observer; C = beam splitter (half-silvered mirror); D_1, D_2, and D_3 are corner mirrors.

strings. The gyroscope is one of the most sensitive devices that responds even to the slightest deviation of its frame from an inertial frame. This direction preserving property of the gyroscope is widely used in navigation.

The mechanical means for measuring accelerations have been so good that comparatively little attention has been given to optical or, in general, to electromagnetic means. If inertial frames are not intrinsically distinguishable, either by mechanical or by optical means, and if noninertial frames are intrinsically distinguishable by mechanical means, then one can expect, on the basis of electromechanical parallelism, noninertial frames also to be distinguishable by means of purely electromagnetic methods. (Mechanical methods utilizing optical and electrical means for increasing the read-out sensitivity are obviously to be classified as mechanical methods of acceleration detection.)

Sagnac (1913) first demonstrated the feasibility of an optical experiment capable of indicating the state of rotation of the frame of reference in which his interferometer was at rest. The red shift of spectral lines is another but much less sensitive example of intrinsic detection of acceleration. Some little known unipolar induction phenomena share with the Sagnac effect the basic feature of an intrinsic detection of rotation. The emphasis in the following is on the Sagnac effect.

II. SAGNAC-TYPE EXPERIMENTATION

Earlier review of the Sagnac effect and its experimental and theoretical ramifications have been given by von Laue (1920), Metz (1952), and by Zernike (1947). The geometric optical nature of these experiments permits a simple kinematical analysis which was succinctly treated by Zernike.

The basic principle of Sagnac's interferometer is given in Fig. 1. The light beam coming from the source A is split by C into a beam circulating the loop in a clockwise direction $CD_3D_2D_1C$ and a beam circulating the same loop in a counterclockwise direction $CD_1D_2D_3C$. The two beams are reunited at C so that interference fringes are observed in B. When the whole interferometer with light source and fringe detector is set in rotation with an angular rate of $\mathbf{\Omega}$ rad/sec, a fringe shift ΔZ with respect to the fringe position for the stationary interferometer is observed, which is given by the formula

$$\Delta Z = 4\mathbf{\Omega}\cdot\mathbf{A}/\lambda_0 c, \tag{1}$$

in which $\mathbf{A}$ is the area enclosed by the light path. The vacuum wavelength is λ_0 and the free-space velocity of light is c. The scalar product $\mathbf{\Omega}\cdot\mathbf{A}$ denotes that ΔZ is proportional to the cosine of the angle between the axis of rotation and the normal to the optical circuit.

For a proper execution of the Sagnac experiment it is mandatory that the mirror positions do not change under the influence of centrifugal force. Pattern changes due to distortion of the interferometer would not in general result in a pure fringe shift and are therefore distinguishable from the expected effect. Another criterion is that distortions do not depend on the direction of rotation.

The fringe shift given by formula (1) can be doubled by making a comparison between the fringe positions obtained on rotating in opposite directions. Sagnac (1914) thus obtained, for the wavelength of indigo mercury light and a loop area $A = 866$ cm^2, a fringe shift of 0.07 fringes for a rate of rotation of 2 rps. This fringe shift, he writes, was clearly detectable.

The fringe shift detectability at that time was probably of the order of 0.01 of a fringe. The precision of Sagnac's experiment therefore may have been close to marginal. Figure 2 gives an impression of Sagnac's original equipment. The light source and the fringe (shift) detection occur on the rotating disk. Sagnac also established that the effect does not depend on the shape of the loop or the center of rotation.

A German graduate student, Harress (1911), performed a very similar experiment for a thesis project a few years before Sagnac did his experiment. Harress

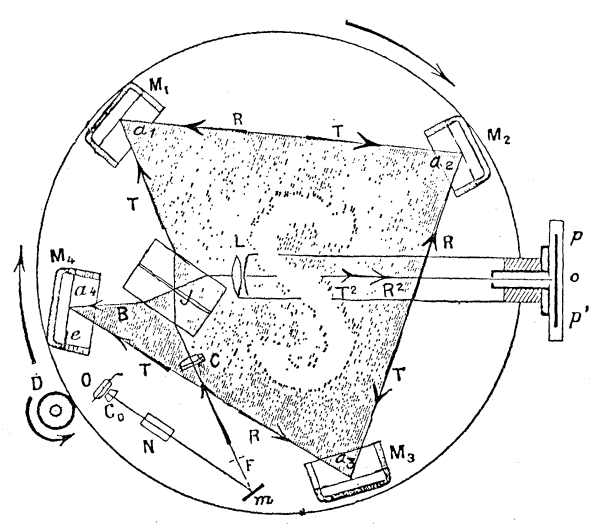

FIG. 2. Sagnac's original interferometer.

used an optical circuit which consisted of a ring of totally reflecting prisms, shown in Fig. 3. The light was propagated in the glass.

Harress' objective was quite different from Sagnac's. Harress wanted to measure the dispersion properties of glasses [Michelson (1886) and Zeeman (1919)] and he felt that a ring interferometer would be a suitable instrument. [Harress' thesis is not available in this country. The above information was extracted from the subsequent discussions of Harress' experiment by Harzer (1914) and von Laue (1920).] The motivation for choosing this arrangement was perhaps based on the idea that it is technically advantageous to substitute a circular motion for the linear motion encountered in the Fresnel–Fizeau experiment for the dragging of light in a moving optical medium.

The Fresnel–Fizeau coefficient of drag α is given by the expression

$$\alpha=(1-n^{-2}-\partial \ln n/\partial \ln \lambda). \qquad (2)$$

Harress apparently assumed that the fringe shift that is observed by rotating the interferometer is due solely to the "dragging" of the light by the moving glass medium. The effect would vanish when expression (2) vanishes, which is the case for free space $n=1$.

By substituting a circular motion for a linear motion Harress tacitly assumed the absence of exactly the effect that Sagnac was looking for. The dispersion data obtained by Harress did not agree well with data available from other methods. Harress did not live to work further towards the solution of this discrepancy.

Harzer (1914) reworked Harress' data on the basis of a different kinematical theory which properly accounted for the rotation. He found in the same year and presumably independently of Sagnac that there would also be a free-space effect of the magnitude given by (1). In addition he came to the interesting conclusion that formula (1), as is, remains valid whether or not a comoving refracting medium is placed in the path of the light beam. Hence the fringe shift ΔZ is solely determined by the free-space wavelength λ_0 and the free-space velocity c; a result not suggested by the structure of formula (1) because the product of wavelength and propagation velocity in the medium is proportional to $1/n^2$.

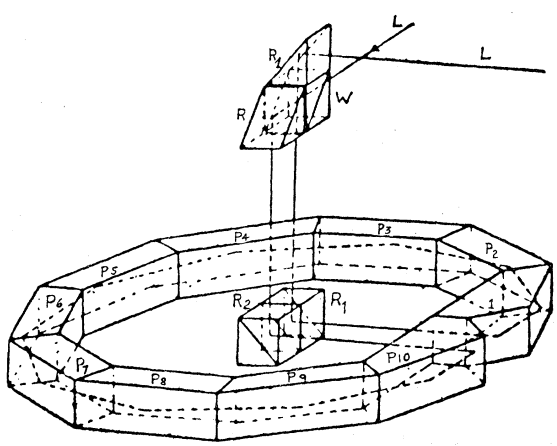

Fig. 3. Harress' ring interferometer.

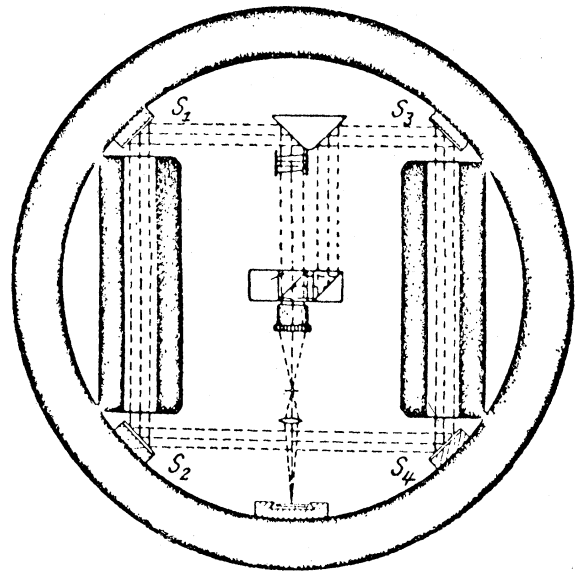

Fig. 4. Interferometer used in Pogany's second experiment with two glass rods in the light path.

Harzer (1914) expressed surprise that Harress' reworked data also suggested that the dispersion term $\partial \ln n/\partial \ln \lambda$ has no influence on the final fringe shift. It would not have been possible to draw this conclusion if Harress' data had not been considerably more precise than Sagnac's.

Einstein (1914) subsequently pointed out in a short note that the dispersion term in (2) really stems from a Doppler shift due to a motion between source and medium. Inspection of Fig. 3 shows that there is no indication for introducing this correction in connection with the Harress' ring interferometer.

A Sagnac experiment of great precision was subsequently performed by Pogany (1926). With a loop area $A=1178$ cm^2, $\Omega=157.43$ rad/sec, and $\lambda_0=5460\times10^{-8}$ cm, he reproduced within 2% the theoretically expected (double) fringe shift $\Delta Z=0.906$.

Two years later he repeated the experiment, this time with two glass rods in the path of the light beam. He came within 1% of the theoretically expected fringe shift. The experimental arrangement for Pogany's second experiment (1928) with the glass rods in the light beam is shown in Fig. 4. The ruggedness of the construction is demonstrated by the fact that he could still observe fringes at 3000 rpm.

Michelson and Gale (1925) succeeded in demonstrating the rotation of the earth by means of the

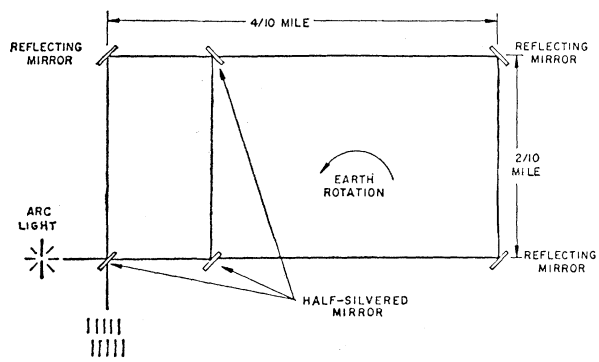

FIG. 5. Michelson–Gale interferometer with calibration circuit.

Sagnac effect. To obtain the required sensitivity they had to choose an unusually large size for the surface area enclosed by the beam (Fig. 5).

In this case the fringe shift had to be shown by changing the surface area A of the loop, instead of the rate of rotation Ω. Because of the calibration circuit and the fact that it was necessary to have the light beam travelling in vacuum to prevent blurring by unwanted Fresnel–Fizeau drag phenomena, the Michelson–Gale experiment was a major optical achievement.

Michelson (1897), prior to Sagnac (1914) and Harress (1911), attempted a similar experiment, although instead of independently rotating the interferometer he hoped to obtain an indication of the rotational motion of the earth with respect to the ether. The results were inconclusive. He also obtained a relation of the form (1) except for a calculational error of a factor of 2, which was corrected in the later paper on the successful experiment with Gale (1925). Apparently Michelson never placed a (smaller loop) interferometer on a uniformly rotating turntable.

To avoid possible confusion, it may be remarked that the beam path in the more well-known Michelson–Morley (1886) interferometer, which *was* mounted on a turntable, does not enclose a finite surface area; therefore no fringe shift can be expected as a result of a uniform rotation of the latter.

Summarizing, the experiments of Sagnac, Pogany, and Michelson–Gale and the results of Harress, as reinterpreted by Harzer, demonstrate beyond doubt the following features of the Sagnac effect. The observed fringe shift

(a) obeys formula (1);
(b) does not depend on the shape of surface area A;
(c) does not depend on the location of the center of rotation;
(d) does not depend on the presence of a comoving refracting medium in the path of the beam.

Dufour and Prunier (1937) confirmed that the fringe shift does not depend on whether the observations are made on the rotating system. Depending on the experimental arrangement, one would expect a slight shift due to a possible Doppler shift in wavelength between a stationary point of observation and the point on the disk where clockwise and counterclockwise beams reemerge reunited (the beam splitter). If v is the mutual velocity of stationary observer and beam splitter, the difference would be

$$\delta(\Delta Z)=\frac{4A\Omega}{c\lambda_0(1+v/c)}-\frac{4A\Omega}{c\lambda_0} \approx-(4A\Omega/c\lambda_0)(v/c), \tag{3}$$

which is v/c times smaller than the effects one wants to observe.

A similar argument holds when one uses a stationary instead of a comoving light source.

Dufour and Prunier (1942) also did an experiment whereby the light traverses a stationary optical medium while the interferometer is rotating. Their experiment indicated that the observed fringe shift increases with the presence of a stationary medium in the beam. The effect of the medium vanishes only if the medium rotates with the interferometer.

Invention of the laser has opened new horizons in the art of interferometry. The measurement of optical beat frequencies, as an alternative to fringe shift measurements, has become a realistic possibility. A self-oscillating version of the Sagnac ring was suggested by Rosenthal (1962) and was subsequently brought into operation by Macek and Davis (1963). This ring laser lends itself almost ideally to generating an unusually stable beat between two optical frequencies, because the clockwise and counterclockwise modes occur in the same optical cavity. Although the individual modes may fluctuate many MHz due to the ever-present mechanical instabilities, the frequency difference can nevertheless be stable to within a few Hz because the two modes have almost identical fluctuation.

The enantiomorphic symmetry of the two modes makes them prone to locking as soon as slight nonlinearities occur in the laser medium. Hence the symmetry that enhances the beat frequency stability also invites a new complication which can be overcome only by artifically introducing an extra asymmetry in the beam path.

A nonreciprocal element, which has a different optical path length for the clockwise and the counterclockwise beams, can be used for the purpose of unlocking. In fact, the Sagnac effect itself is nonreciprocal and can be used by providing an extra mechanical rotation as a bias. A Faraday cell is an electromagnetic equivalent that leads to the same result. The enhanced asymmetry has, however, an adverse effect on the stability of the beat frequency because of the incomplete cancellation of fluctuations.

The ring laser (Fig. 6) is the most recent development in experimental devices based on the Sagnac effect. This instrument also invites modifications similar to those for the ring interferometer. For instance, how does a refracting medium in the path of the beam affect the beat frequency for a given rate of rotation? There is as yet no published material pertaining to such experiments.

In Sec. IV it is shown that, unlike the corresponding result for the ring interferometer, a comoving optical medium in the laser beam affects the beat frequency.

III. GENERAL ASPECTS OF THE THEORY

The following sections compare the results of the kinematical analysis of the Sagnac effect with the asymptotic results of an electromagnetic discussion of the Sagnac effect. The required agreement between

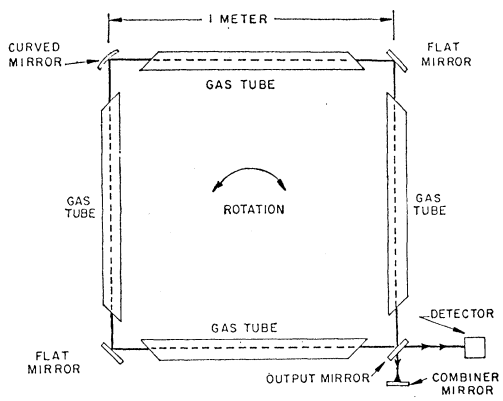

FIG. 6. The ring laser (Macek and Davis, 1963).

these different approaches provides valuable information concerning the electrodynamics of accelerated systems.

The kinematical and the electromagnetic approaches each permits discussion from the point of view of the stationary observer and discussion from the point of view of the comoving observer. The nature of the Sagnac experiment requires, as mentioned in the previous section, a first order agreement between these two possibilities of observation. The organizational diagram, shown in Fig. 7, gives a general view of the mutual relations of these different methods of analyzing the problem.

The analyses corresponding to the possibilities indicated in Fig. 7, require that observations made by the stationary observer can be related to observations made by the comoving observer. The mathematical interconnection of these different points of view requires knowledge of a coordinate transformation which provides a physically meaningful interrelation within

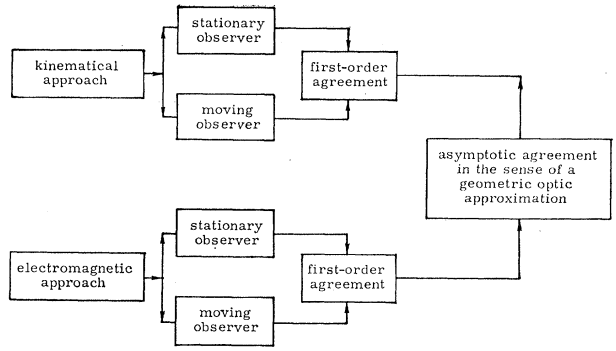

FIG. 7. Flow diagram for methods of analysis.

the frame of the principle of general space–time covariance.

For uniform rotation in the case of the Sagnac effect one would expect on intuitive grounds that a Galilean rotation (absolute time) might give the correct choice of space–time coordinate transformation. In consideration, however, of well-known experiences with electromagnetic theory in the realm of uniform translations where the Galilei translation (absolute time) is not an adequate substitute for a Lorentz translation, it is useful to give special attention to the question of selecting the right transformation for uniform rotations.

The problem can be suitably analyzed for the following simple but physically conceivable configuration. Suppose the light beams are constrained to follow a circular path of radius R as illustrated in Fig. 8. We calculate the time difference between a counterclockwise circulation (a) and a clockwise circulation (b) of the light as seen by a stationary observer. The two beams leave the beam splitter when it is in position C. The counterclockwise circulation is opposite to the direction of rotation and meets the beam splitter again in the new position C′ shifted by $\Delta s'$ with respect to C. The clockwise beam, travelling in the same direction as the direction of rotation, meets the beam splitter in the later position C″, shifted by $\Delta s''$ with respect to C. The geometry of Fig. 8 gives the following relations, in which c is the free-space light velocity in an inertial frame and Ω the rate of rotation of the circular inter-

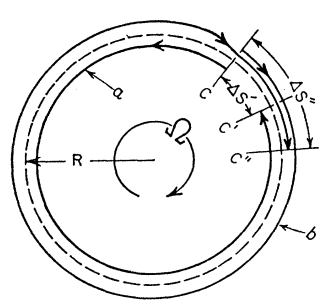

FIG. 8. Simplified Sagnac configuration.

ferometer:

$$\tau' = (2\pi R - \Delta s')/c = \Delta s'/\Omega R, \tag{4}$$

$$\tau'' = (2\pi R + \Delta s'')/c = \Delta s''/\Omega R. \tag{5}$$

Eliminating $\Delta s'$ and $\Delta s''$ from Eqs. (4) and (5), one obtains for the time difference

$$(\Delta\tau)_s = \tau'' - \tau',$$

$$(\Delta\tau)_s = 4\pi R^2\Omega/[c^2 - (\Omega R)^2], \tag{6}$$

and for $\pi R^2 = A$, the surface area of the circular loop,

$$(\Delta\tau)_s = 4\Omega A/[c^2 - (\Omega R)^2]. \tag{7}$$

The time interval $(\Delta\tau)_s$ between the consecutive positions C′ and C″ of the beam splitter is observed in the stationary frame and is therefore dilated by a factor γ. Hence the time interval $(\Delta\tau)_m$ observed on the moving beam splitter itself would be

$$(\Delta\tau)_m = (\Delta\tau)_s/\gamma, \tag{8}$$

or according to Eq. (7)

$$(\Delta\tau)_m = 4\Omega A/\gamma(c^2 - \Omega^2 R^2). \tag{9}$$

Following Langevin (1921), let us now attempt to evaluate $(\Delta\tau)_m$ directly by transforming the line element to a rotating frame of reference. As Langevin (1937) remarked, several transformations lead to the experimentally observable first order result of Eq. (1). This number of possibilities can be restricted to essentially one transformation by demanding consistency with the presumably higher order correct result given by Eq. (9).

The line element in polar coordinates for an inertial frame is given by

$$ds^2 = c^2\, dt^2 - dr^2 - r^2\, d\phi^2. \tag{10}$$

The transformation

$$dt = \gamma\, dt',$$

$$dr = dr',$$

$$d\phi = d\phi' + \gamma\Omega\, dt', \tag{11}$$

converts Eq. (10) into the form for the rotating frame,

$$ds^2 = \gamma^2 c^2\, dt'^2 - dr'^2 - r^2(d\phi' + \gamma\Omega\, dt')^2, \tag{12}$$

in which γ is an at present undertermined factor in the transformation (11).

The line element vanishes for free-space propagation. The circular symmetric path of the beams occurs at the radius $r' = R$, hence $dr' = 0$, and Eq. (12) becomes

$$ds^2 = \gamma^2 c^2\, dt'^2 - R^2(d\phi' + \gamma\Omega\, dt')^2 = 0. \tag{13}$$

Equation (13) is quadratic in the time element dt' and has the roots

$$(dt')_{1,2} = \pm R d\varphi'/(c \mp \Omega R)\gamma, \tag{14}$$

corresponding to clockwise and counterclockwise propagation of the light. The circulation times t_1' and t_2' in the rotating frame are obtained by integrating ϕ' from $0 \to 2\pi$ and $0 \to -2\pi$, respectively,

$$t_1' = 2\pi R/(c - \Omega R)\gamma,$$

$$t_2' = 2\pi R/(c + \Omega R)\gamma, \tag{15}$$

where it is assumed that γ does not depend on the angle ϕ'.

The time difference in the rotating frame then becomes

$$t_1' - t_2' = (\Delta\tau)_m = 4\pi\Omega R^2/\gamma(c^2 - \Omega^2 R^2), \tag{16}$$

or for $\pi R^2 = A$,

$$(\Delta\tau)_m = 4A\Omega/\gamma(c^2 - \Omega^2 R^2), \tag{17}$$

which is the same as Eq. (9), obtained by applying the time dilation factor γ directly to the time interval for the stationary frame $(\Delta\tau)_s$. Hence the agreement between the results of Eqs. (17) and (9) holds regardless of the value of γ, provided γ is independent of ϕ'.

Langevin took the particular value

$$\gamma = 1, \tag{18}$$

which makes transformation (11) an absolute time Galilean-type rotation

$$d\phi = d\phi' + \Omega\, dt. \tag{19}$$

The calculated value of $\Delta\tau$ is then the same for stationary and for moving observers

$$(\Delta\tau)_m = (\Delta\tau)_s = (4A\Omega/c^2)[1 - (\Omega R/c)^2]^{-1}. \tag{20}$$

If we take, for the time dilation, the well-established expression

$$\gamma = [1 - (\Omega R/c)^2]^{-1/2}, \tag{21}$$

one still has according to Eq. (7)

$$(\Delta\tau)_s = (4A\Omega/c^2)[1 - (\Omega R/c)^2]^{-1}. \tag{22}$$

but for $(\Delta\tau)_m$ one now has

$$(\Delta\tau)_m = (4A\Omega/c^2)[1 - (\Omega R/c)^2]^{-1/2}. \tag{23}$$

Transformation (11) now differs from the familiar Galilean rotation (19). It becomes

$$dt = dt'/[1 - (\Omega R/c)^2]^{1/2},$$

$$dr = dr',$$

$$d\phi = d\phi' + \Omega\, dt'/[1 - (\Omega R/c)^2]^{1/2}. \tag{24}$$

[See the Appendix for an alternate way of obtaining (24).]

The calculated values for $\Delta\tau$, (20), (22), and (23) are not experimentally distinguishable with presently available equipment, because for

$$\Omega R \ll c, \tag{25}$$

all corrections in $\Delta\tau$ are of the order

$$(\Omega R/c)^2 \Delta\tau, \tag{26}$$

which is still one order smaller than the Doppler correction (3) which occurs when observing fringe shifts instead of time intervals.

For all practical purposes, one may accept as adequate for the time interval, in the stationary as well as in the rotating frame, the formula

$$\Delta\tau = 4A\Omega/c^2, \tag{27}$$

and for the fringe shift the formula

$$\Delta Z = 4A\Omega/c\lambda_0, \tag{28}$$

which is the same as (1). The latter formula is obtained from (27) by converting the time difference to a fringe shift, by multiplication by c/λ_0.

Langevin (1937), and much later and presumably independently Trocheris (1949), have pointed out that the transformation

$$dt = dt' + (\Omega R^2 d\phi'/c^2) \tag{29}$$

can also be used to obtain an expression for $\Delta\tau$. By integrating $d(t-t')$ over $\pm 2\pi$ for clockwise and counterclockwise beams, respectively, and subsequently subtracting one obtains

$$\Delta\tau = 4\Omega A/c^2. \tag{30}$$

Equation (29) is a recasting of the first-order Lorentz transformation into polar coordinates after which it is applied to the periphery of the circular optical loop. The first order approximation of the Lorentz transformation is required to give t and t' equal time units, which means that $\gamma = 1$.

The physical difference between (24) and (29) is that (29) implies a local time nonuniformity and spatial isotropy versus a nonreciprocal propagation anisotropy resulting from (24). In Sec. V we see that the nonreciprocal features associated with rotating systems support transformations (11) or (24) rather than transformation (29). In the Appendix it is shown why (24) rather than (29) has the proper asymptotic relation to the Lorentz transformation.

We thus conclude that transformation (24) has a unique and preferred status if we concede that the time dilation (21) is a unique and established relation which is also valid beyond the realm of uniform translation.

The experimentation that was discussed in the previous section can hardly be expected to establish the magnitude of the higher-order terms, even if considerable refinement in observation were applied to improve the sensitivity. In the following we therefore consider results of first order in Ω only.

The search for a physically meaningful transformation for rotation is not aided in any way whatever by the principle of general space–time covariance, nor is it true that the space–time theory of gravitation plays any direct role in establishing physically correct transformations.

The principle of general space–time covariance appears as a necessary mathematical facility which is able to accommodate within the realm of its formalism the realistic as well as the unrealistic transformations. Galilean or Lorentz translations, Galilean-type (absolute time) rotations or rotations of the form (11) or (24), are all equally permissible from a mathematical point of view, because all of them are subgroups contained in the set of general space–time transformations implied by the principle of general covariance.

IV. GEOMETRIC OPTICAL THEORY

The previous section treated with higher-order detail the geometric optical theory of the Sagnac effect for a very simplified physical arrangement. We learned that higher-order effects can be neglected for all practical experimental purposes. We may now attack the problem of a general first-order geometric optical analysis of more realistic experimental configurations of interferometers and ring lasers, including cases having optically refracting materials in the path of the light beams.

It is convenient to define first the meaning of the symbols that occur in the following derivations:

ϕ = phase of the wave front of the light beam in radians.
Z = path measured in wavelengths also called the mode number in the case of a self-oscillating system.
δZ = fringe shift associated with a comparison of the moving and the stationary system.
ΔZ = fringe shift associated with interference of clockwise and counterclockwise beams.
n = index of refraction of the stationary medium.
$\mathbf{k}$ = wave vector in medium.
k = wave number in medium $k^2 = \mathbf{k}\cdot\mathbf{k}$.
$k_0 = k/n$, free-space wave number.
$\lambda = 2\pi/k$, wavelength in medium.
$\lambda_0 = \lambda n$, free-space wavelength.
ω = circular frequency.
$\nu = \omega/2\pi$ frequency.
$d\mathbf{r}$ = vector line element.
ds = scalar line element $ds^2 = d\mathbf{r}\cdot d\mathbf{r}$.
τ = circulation time for the light for stationary loop.
$\delta\tau$ = change of circulation time with respect to the stationary case.

$\Delta\tau$ = difference in circulation time between clockwise and counterclockwise circulation.
$\mathbf{v}$ = velocity field
$\mathbf{q}$ = displacement vector generated by $\mathbf{v}$.
$u=c/n$, phase velocity in medium.
c = free-space velocity.

The phase expression for the light beam after one circulation in a closed loop of arbitrary shape is

$$\phi=\frac{1}{2\pi}\oint \mathbf{k}\cdot d\mathbf{r}-\frac{1}{2\pi}\int_0^\tau \omega\, dt. \tag{31}$$

The first integral in Eq. (31) counts the number of wavelengths in the closed spatial path, the second integral gives the number or radians over which the monochromatic signal advances during the time needed for one circulation. The spatial part of the line integral is closed, whereas the time part is not closed.

Expression (31) is a space–time line integral which could have been easily rendered in the general-invariant form $\int k_\lambda\, dx^\lambda$, if k_λ, for $\lambda=0, 1, 2, 3$, is considered as the four-vector of frequency and wave number. For the present purpose it is more practical to retain the conventional spatial form. Multiplication by Planck's constant h converts (31) into a Hamilton action integral

$$\oint \mathbf{p}\cdot d\mathbf{r}-\int H\, dt=\int L\, dt, \qquad (L=\text{Lagrangian}) \tag{32}$$

with $(-H, \mathbf{p})$ the four-vector of energy-momentum, showing the action and phase to be related invariants for general space–time transformations.

Now we suppose that the constraint (that is the interferometer), forcing the light to circulate in a closed loop, is subjected to a small time-dependent displacement $\mathbf{q}$, generated by the velocity $\mathbf{v}$. The phase ϕ is a general invariant and should not be affected by this displacement provided we properly account for the variation of the boundaries. We thus find

$$\delta\phi=\delta Z-\delta T=0, \tag{33}$$

where

$$2\pi\delta Z=\delta\oint \mathbf{k}\cdot d\mathbf{r}$$

$$=\oint \{\delta\mathbf{k}-\mathbf{q}\times \operatorname{curl}\mathbf{k}+\operatorname{grad}(\mathbf{k}\cdot\mathbf{q})\}\cdot d\mathbf{r} \tag{34}$$

and

$$2\pi\delta T=\delta\int_0^\tau \omega\, dt=\int_0^\tau \delta\omega\, dt+\omega\delta\tau. \tag{35}$$

The variation of the spatial part of the space–time line integral (31) as given by Eq. (34) is based on a well-known formula (Madelung, 1943, and Brandstatter, 1963) which gives the variation of a line integral as the result of a deformation field $\mathbf{q}$. The variation is expressed in terms of parameters that relate to a frame of reference in which the stationary system is described (inertial frame). We assume for the interferometer that we are dealing with a situation for which geometric optical conditions prevail. We may then apply the Sommerfeld–Runge law which says that (Poeverlein, 1962)

$$\operatorname{curl}\mathbf{k}=0. \tag{36}$$

Using (36) and integrating the last term in (34) one obtains for δZ

$$2\pi\delta Z=\oint \delta\mathbf{k}\cdot d\mathbf{r}+(\mathbf{k}\cdot\mathbf{q})_2-(\mathbf{k}\cdot\mathbf{q})_1. \tag{37}$$

The suffixes (2) and (1) in Eq. (37) denote the values of the scalar product $(\mathbf{k}\cdot\mathbf{q})$ at the end and at the beginning of one circulation around the loop. It is important to note that $\mathbf{q}$ is not single valued for a circulation around the loop because the deformation increases with time.

Equation (37) represents the change in path length Z in terms of the wavelength as compared with the value of Z for the stationary loop. This change δZ is simply the fringe shift associated with the velocity field $\mathbf{v}$. The first part gives the "intrinsic" change of the wave vector due to $\mathbf{v}$ and the last part is the contribution due to the change of the boundaries of the integral.

We could have taken the variation of Z as the starting point of a conventional spatial discussion of the fringe-shift problem. It will appear that the space–time generalization comes in handy for future use.

A general space–time variation of ϕ yields, along with the Sommerfeld–Runge law, the Hamilton equations of motion for the light rays. The Hamilton equations plus the Sommerfeld–Runge law are mathematically the necessary and sufficient conditions that make the four-vector of frequency and wave number curl free in a space–time sense. This property makes the integrand of the space–time line integral (31) for the phase ϕ a total differential for the permissible trajectories. We do not explicitly need these Hamilton equations for the present purpose. It is sufficient to assume for the actual trajectories of the light beams in the interometer that they follow simple straight lines between the mirrors. The Hamilton equations for the light ray become operational only if the frequency is a function of position and if the medium is dispersive. Unless specifically stated, neither is the case in the following applications. The Sommerfeld–Runge law then remains as the operationally more important dynamical condition for light rays.

We now evaluate the fringe shift for the ring interferometer and the frequency shift for the ring laser

from relations (35) and (37) by applying the appropriate accessory conditions corresponding to the experimental situations.

A. The Moving Ring Interferometer with Comoving Medium

The accessory condition for the ring interferometer is

$$\delta\omega=0, \tag{38}$$

because the external light source determines unambiguously the light frequency occurring in the interferometer. For the light source moving with the interferometer it is obvious that (38) should hold. If the light source is stationary it is possible, depending on the experimental arrangement, that a Doppler shift occurs due to the motion. This Doppler shift affects clockwise and counterclockwise beams both in the same manner so that the fringe shift is only affected in higher orders; equal frequencies, that is, $\delta\omega=0$, are still necessary for interference.

The relation between ω, k and the phase velocity u in a linear medium is given by

$$\omega=ku. \tag{39}$$

Taking into account (38) this yields

$$\delta k/k=-\delta u/u, \tag{40}$$

in which δu is the change in effective propagation velocity in the moving medium as seen by the stationary observer. In first approximation one may assume that δu is given by an expression of the form

$$\delta u=\alpha\mathbf{v}\cdot d\mathbf{r}/ds, \tag{41}$$

in which α is a coefficient of drag, similar to but not necessarily identical with the Fresnel–Fizeau coefficient of drag for translational motion; $d\mathbf{r}/ds$ is the unit vector tangent to the direction of the beam.

It follows from (40) and (41) that

$$\delta k=-(k/u)\alpha\mathbf{v}\cdot(d\mathbf{r}/ds). \tag{42}$$

The integrand in (37) gives $\delta\mathbf{k}$ in the direction of $d\mathbf{r}$ and (42) gives the change of $\mathbf{k}$ in that same direction; hence substitution in (37) yields

$$\delta Z=-\frac{1}{2\pi}\oint\alpha\frac{k}{u}\mathbf{v}\cdot d\mathbf{r}+\frac{1}{2\pi}\{(\mathbf{k}\cdot\mathbf{q})_2-(\mathbf{k}\cdot\mathbf{q})_1\}. \tag{43}$$

The last two terms in (43) can be expressed in the velocity field $\mathbf{v}$ if one considers that $(\mathbf{k}\cdot\mathbf{q})$ changes over the interval of time dt by the amount $\mathbf{k}\cdot\mathbf{v}\,dt$. Hence going around the complete loop one obtains

$$(\mathbf{k}\cdot\mathbf{q})_2-(\mathbf{k}\cdot\mathbf{q})_1=\int_0^T\mathbf{k}\cdot\mathbf{v}\,dt=\oint\mathbf{k}\cdot\mathbf{v}\frac{ds}{u}=\oint\frac{k}{u}\mathbf{v}\cdot d\mathbf{r}, \tag{44}$$

in which one uses the fact that k and dr have the same direction.

A substitution of (44) in (43) gives

$$\delta Z=\frac{1}{2\pi}\oint\frac{k}{u}(1-\alpha)\mathbf{v}\cdot d\mathbf{r}. \tag{45}$$

Expression (45) is not yet the observed result because δZ is the fringe shift that would occur if the circulating beam in the stationary interferometer could interfere with one of the circulating beams in the moving interferometer. When the interferometer is in motion there will also be a beam going in the opposite direction around the loop. Inspection of (45) shows that the beam going in the opposite direction around the loop has a fringe shift δZ of the opposite sign. In the moving interferometer only the two distinct clockwise and counterclockwise beams occur simultaneously—the observed fringes between these beams are shifted by twice the amount δZ in comparison with the fringe position for the stationary interferometer. This simple procedure of doubling the result (45) is valid only if the loop in the stationary case has reciprocal properties, which means there is complete mode degeneracy for the clockwise and counterclockwise beams, because the propagation properties in the opposite direction are the same, when the interferometer is stationary.

Introducing the free-space parameters c and λ_0, one thus finds for the actually observed fringe shift ΔZ, produced by the clockwise and counterclockwise beams in the moving interferometer with comoving medium, when compared with the fringe position for the stationary interferometer

$$\Delta Z=\frac{2}{c\lambda_0}\oint n^2(1-\alpha)\mathbf{v}\cdot d\mathbf{r}. \tag{46}$$

From Eq. (46) one can derive very simply the difference in circulation time between the clockwise and counterclockwise beams. It follows from (33) and (35) and the accessory condition (38) that

$$\omega\delta\tau=2\pi\delta Z, \tag{47}$$

where $\delta\tau$ is again the change in loop circulation time for the clockwise beam, compared with the stationary case. We now define, in a similar manner to the case of the fringe shift, $\Delta\tau$ as the difference in circulation time between the clockwise and counterclockwise beams, thus leading to the corresponding relation

$$\omega\Delta\tau=2\pi\Delta Z. \tag{47a}$$

From (46) we then obtain for

$$\Delta\tau=\frac{2}{c^2}\oint n^2(1-\alpha)\mathbf{v}\cdot d\mathbf{r} \tag{48}$$

in the moving interferometer with comoving optical medium.

B. The Moving Ring Laser with Comoving Medium

For the ring laser we need instead of (38) an accessory condition which states that the phase going around the loop should be univalued for sustained oscillation. If one excludes the possibility of mode jumping as a result of the motion of the ring laser (an experimentally easily detectable occurrence) one thus imposes the condition that the number of wavelengths in the loop should remain constant (constant mode number)

$$\delta Z=0. \tag{49}$$

It then follows from (33) that $\delta T=0$ or from Eq. (35)

$$\int_0^\tau \delta\omega\, dt+\omega\, \delta\tau=0. \tag{50}$$

For a uniform and stationary motion $\delta\omega$, which is now different from zero, should be constant. It then follows from (50) that

$$\delta\omega/\omega=-\delta\tau/\tau; \tag{50a}$$

and following the now familiar doubling procedure for the frequency and transition time difference between the clockwise and counterclockwise modes

$$|\,\Delta\omega/\omega\,|=\Delta\tau/\tau. \tag{50b}$$

The difference in the circulation times between the clockwise and counterclockwise beams does not depend on whether the optical circuit is being used as an interferometer or as a ring laser. Hence using Eq. (48) one obtains

$$\left|\frac{\Delta\omega}{\omega}\right|=\left(2\oint n^2(1-\alpha)\mathbf{v}\cdot d\mathbf{r}\right)\Big/\, c\oint n\, ds \tag{51}$$

in which τ has been expressed in the path length and propagation velocity through the Fermat integral

$$\tau=\oint\frac{ds}{c/n}. \tag{52}$$

The logically more consistent, but also more lengthy procedure for deriving (51) is to start from $\delta Z=0$ and eliminate δk by means of the relation $\delta k/k=\delta\omega/\omega-\delta u/u$, which leads to the same result (51).

C. The Moving Interferometer and Ring Laser with a Stationary Medium in the Beam Path

The starting point for the discussion is again formula (37) except that according to (40) the change in the wave vector δk should vanish, because δu vanishes when observing the propagation velocity in the medium from a frame of reference in which the medium rests. The fringe shift ΔZ is then given by

$$\Delta Z=\frac{2}{c\lambda_0}\oint n^2\mathbf{v}\cdot d\mathbf{r}, \tag{53}$$

which is (46) for zero drag, that is, $\alpha=0$.

Evaluation of the integral in (53) is cumbersome if the stationary medium does not completely fill the path of the light beams between the mirrors of the interferometer.

Similar arguments apply to the self-oscillating case. The corresponding formula for the beat frequency is

$$\frac{\Delta\omega}{\omega}=\frac{2}{c}\left(\oint n^2\mathbf{v}\cdot d\mathbf{r}\Big/\oint n\, ds\right). \tag{54}$$

Prunier and Dufour (1942) performed an experiment with a rotating ring interferometer in which the light was flashed through stationary glass rods. For practical reasons they had to permit an airgap in the beam path.

D. The Stationary Ring Interferometer and Ring Laser with a Moving Medium in the Beam Path

Going back to formula (37) we now have a situation, which is due to the motion of the loop, in which the integrated parts vanish because the loop is stationary. The fringe shift is now due solely to the phenomenon of drag given by the integral in (37). The fringe shift then becomes, through the use of (42),

$$\Delta Z=\frac{2}{c\lambda_0}\oint n^2\alpha\mathbf{v}\cdot d\mathbf{r} \tag{55}$$

and the corresponding beat frequency for the ring laser

$$\frac{\Delta\omega}{\omega}=\frac{2}{c}\left(\oint n^2\alpha\mathbf{v}\cdot d\mathbf{r}\Big/\oint n\, ds\right). \tag{56}$$

Expression (55) represents the well known Fresnel–Fizeau effect for a translational motion. A rotational version of this experiment has apparently not yet been made. Such an experiment would not be altogether trivial because it could inform us about the extent to which the translational coefficient of drag can be extrapolated to cases of nonuniform motion.

E. Two Formulas for Ring Lasers

Finally we give two explicit cases: the triangular and the square ring laser of main dimensions D and a comoving slug of optical material of length d in the beam path. The coefficient of drag α is given by (2), without the dispersion term, that is, $\alpha=1-n^{-2}$.

An application of formula (51) for the triangular ring laser gives (see Fig. 9)

$$\frac{\Delta\omega}{\omega}=\frac{\sqrt{3}\Omega D}{c\{3+(n-1)(d/D)\}} \tag{57}$$

for the ring laser formed by an equilateral triangle.

The corresponding formula for the square ring laser is (see Fig. 10)

$$\frac{\Delta\omega}{\omega}=\frac{4\Omega D}{c\{4+(n-1)(d/D)\}}. \tag{58}$$

The length of the slug d and the index of refraction occur as a product in the denominator so that an increase of either d or n has the same effect. The relative frequency shift $\Delta\omega/\omega$ is, according to the theory, independent of the position of the slug in the beam path.

To evaluate expression (51) it is advantageous to apply Stokes theorem to the line integral

$$\oint \mathbf{v}\cdot d\mathbf{r}=\oint \operatorname{curl}\mathbf{v}\cdot d\mathbf{A}=2\boldsymbol{\Omega}\cdot\mathbf{A}. \tag{59}$$

One uses here the well-known property of a purely rotational field $\mathbf{v}$

$$\operatorname{curl}\mathbf{v}=2\boldsymbol{\Omega}, \tag{60}$$

whereby $\boldsymbol{\Omega}$ is the vector that gives the direction and the rate of rotation. The constancy of $\boldsymbol{\Omega}$ in relation (60) accounts for the independence of the Sagnac effect from the center around which the equipment is being rotated.

The original Sagnac formula (1) is obtained from (46) by taking $\alpha=1-n^{-2}$ and by using the relations (59) and (60).

The beat frequency of a ring laser, unlike the fringe shift of the ring interferometer, depends on the properties of the comoving medium traversed by the beams. Khromykh (1966) has pointed out that therefore the dispersion can also affect the observed beat frequency. Later considerations show (mentioned under the heading Consistency Checks) that the dispersion comes into the final result only through the denominator of (51). The index of refraction for the clockwise mode differs from the index of refraction of the counterclockwise mode because of the frequency difference between the two modes. On making a Taylor expansion of the index of refraction n around the center frequency, one finds that the first-order term $(dn/d\omega)$ drops out, while the second derivative $d^2n/d\omega^2$ remains. The contribution of this second-order term near a point of anomalous dispersion, as does occur in a "lasing" medium, may not be quite negligible.

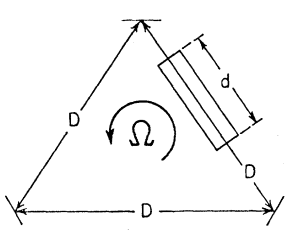

FIG. 9. Triangular ring laser with comoving medium in the beam path.

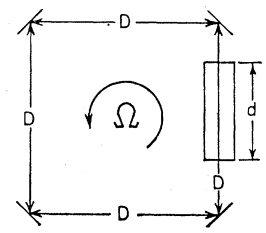

FIG. 10. Square ring laser with comoving medium in the beam path.

F. Consistency Checks

To be consistent with the principle of relativity one has to demand that the Sagnac interferometer and the ring laser cannot lead to a fringe shift or a beat frequency if the equipment is in uniform translational motion. An inspection of formulas (46) and (51) shows that it is necessary and sufficient to require that

$$\oint n^2(1-\alpha)\mathbf{v}\cdot d\mathbf{r}=0, \tag{61}$$

if $\mathbf{v}$ is a uniform translational velocity field.

It is known that

$$\oint \mathbf{v}\cdot d\mathbf{r}=0, \tag{62}$$

if $\mathbf{v}$ is a uniform translational velocity.

Relations (61) and (62) are compatible if and only if

$$n^2(1-\alpha)=C=(\text{constant}). \tag{63}$$

Hence the coefficient of drag is

$$\alpha=1-C/n^2, \tag{64}$$

which is of the form required by the Fresnel–Fizeau effect. The constant C is known to equal one for a purely translational motion of uniform velocity.

For another consistency check we may consider formulas (53) and (55). Equation (53) gives the fringe shift for a stationary material medium and a moving interferometer, while Eq. (55) gives the fringe shift for a moving medium and a stationary interferometer. The fringe shifts given by these two formulas should be the same if the velocity field $\mathbf{v}$ is a uniform translation, because then both formulas describe the conventional Fresnel–Fizeau effect.

Equation (53) is given by

$$\Delta Z=\frac{2}{c\lambda_0}\oint n^2\mathbf{v}\cdot d\mathbf{r} \tag{65}$$

and Eq. (55) becomes after substituting Eq. (64)

$$\Delta Z=\frac{2}{c\lambda_0}\oint n^2\mathbf{v}\cdot d\mathbf{r}-\frac{2C}{c\lambda_0}\oint \mathbf{v}\cdot d\mathbf{r}. \tag{66}$$

For arbitrary contours of the integrals and for an arbitrary dependence of n on position, one finds that expressions (65) and (66) can be equal and nonzero, if and only if $\mathbf{v}$ is a uniform translational velocity field, because then the last integral in (66) vanishes.

Equations (65) and (66) demonstrate the breakdown of the principle of relativity for nonuniform motion.

A simple, but amusing demonstration is that Eq. (51) is also compatible with the red shift if $\mathbf{v}$ is a uniformly accelerated motion. The index of refraction drops out of the end result as it should.

V. PHYSICAL OPTICAL THEORY

A. Constitutive Relations and Maxwell Equations

A physical optical theory of the Sagnac effect requires an application of electromagnetic theory to rotating or in general to nonuniformly moving systems. The traditional text book form of Maxwell theory is, for a number of reasons, poorly suited for such an endeavor. The most important of these reasons is:

(1) The traditional space–time formulations of the Maxwell equations do not make sufficiently explicit the constitutive properties of free space.

(2) It is not possible as in the case of uniformly translating systems to consider solely the mutual motion of observer and object. A recasting of Maxwell theory so that we can clearly delineate the physical and mathematical steps associated with these two points is necessary.

While it is common practice to speak of constitutive equations for a material electromagnetic medium, it is not customary to speak of constitutive relations for free space, because it is traditionally assumed that there is no physical distinction between dielectric displacement $\mathbf{D}$ and electric field $\mathbf{E}$ nor between magnetic induction $\mathbf{B}$ and magnetic field $\mathbf{H}$ in free space. The basic argument for justifying this so-called Gaussian field identification stems from the apparent absence of any material polarization mechanisms in free space. Dimensional considerations support the idea of at least a formal distinction between the field vectors in free space. The same is true for arguments based on mathematical invariance. Neither the dimensional nor the invariance features have been accepted as physically sufficiently compelling to abandon the electromagnetic field identification in free space.

The absence of a field distinction between $\mathbf{E}$, $\mathbf{D}$ and $\mathbf{H}$, $\mathbf{B}$ in vacuum in customary discussions of Maxwell's theory must be considered as a flaw, because it sweeps the medium aspects of free space under the rug. In fact, the identification $\mathbf{E}=\mathbf{D}$ and $\mathbf{B}=\mathbf{H}$ may be said to define the electromagnetic properties of free space, only as seen from inertial frames because the field identification, in conjunction with the Maxwell equations, leads to the standard free-space d'Alembertian wave equation which is a Lorentz invariant structure.

A d'Alembertian wave equation can, in no way whatever, explain the nonreciprocal asymmetry between the clockwise and counterclockwise beams observed in the Sagnac effect, because a nonreciprocity requires the presence of mixed space–time derivatives $(\partial/\partial t\ \partial x)$ in the wave equation. Thus in order to account for the asymmetry one has to assume that either the Gaussian field identification does not hold in a rotating frame or that the Maxwell equations are affected by rotation.

All existing evidence for the treatment of nonreciprocal phenomena in material media points in the direction of modified constitutive relations, not modified Maxwell equations. In fact, the Maxwell equations, as the universal laws of macroelectromagnetics, are expected to apply to any medium regardless of the symmetry properties of that medium and regardless of the mutual motion of the frame of reference and the medium. A detectable mutual motion of medium and frame of reference reveals a lack of space–time symmetry. Free space has the interesting space–time symmetry property which says that uniform translations cannot be detected. This space–time symmetry is characterized by the Lorentz group.

It is particularly true that the Gaussian field identification is a Lorentz invariant identification. Conversely, the invariance of the field identification can be used to define the Lorentz group. This becomes clear if one realizes that the Minkowskian six-vectors $\mathbf{E}$, $\mathbf{B}$ and $\mathbf{D}$, $\mathbf{H}$ in free space are related by the space–time metric. Insisting on the Gaussian field identification is then equivalent to an insistance on the invariance of the Minkowskian metric $(c^2, -1, -1, -1)$. This invariance defines the Lorentz group as a symmetry property of the space–time continuum for uniform translations.

The common assertion that the Maxwell equations have a built-in Lorentz invariance holds by virtue of the Gaussian field identification $\mathbf{E}=\mathbf{D}$, $\mathbf{H}=\mathbf{B}$ (or $\mathbf{D}=\epsilon_0\mathbf{E}$ and $\mathbf{B}=\mu_0\mathbf{H}$, with ϵ_0 and μ_0 constants). It was therefore Gauss who, perhaps unwittingly, injected this (special) relativistic element into the Maxwellian theory for free space, simply by the tacit suggestion that the free-space identification would be valid in any frame of reference regardless of its state of motion. We see from the present considerations that the latter extrapolation (identification for any state of motion including accelerated motion) is mathematically impossible if one demands for logical and methodological reasons that the free-space properties should also be given by a set of free-space constitutive relations while the Maxwell equations are not affected.

The methodological objective of functionally separating constitutive relations and Maxwell equations is

only possible if the Maxwell equations, when written with four field vectors **E**, **D**, **B**, and **H**, indeed obey a much wider invariance group than the Lorentz group. In fact, the invariance group of the Maxwell equations with four spatial vectors should be a covering group of all conceivable space–time symmetries that can physically exist.

Weyl and Cartan recognized quite early the metric independent form invariance of the Maxwell equations for the set of general, nonlinear, space–time transformations. The metric independence of this invariance is important because the space–time metric represents the electromagnetic structural properties of free space. If the metric still appeared in the Maxwell equations, for instance in the form of a covariant derivative, it would mean that the free-space constitutive properties have not been properly extracted from the Maxwell equations. We owe to Cartan (1924) and Weyl (1951) the observation that this separation of fundamental laws and constitutive properties is indeed possible for the theory of electromagnetism. [A careful reading of pages 110 and 220 of Weyl (1951) shows Weyl's awareness of the metric independent form. Cartain (1924, p. 19) states very specifically: "Les equations de Maxwell sont independantes de toute hypothese sur la connection affine de l'espace-temps." The first publication of Weyl's book was in 1918.]

The Maxwell equations are not commonly presented in the Cartan-Weyl form. In comparison with the customary Minkowskian form, all that is needed to bring about the Cartan–Weyl form is, that **E**, **B** constitute a covariant six-vector $F_{\lambda\nu}$ while **D**, **H** constitute a contraviant six-vector density $\mathcal{G}^{\lambda\nu}$ of weight $+1$. The metric independent form of the equations is then

$$\partial_{[\kappa}F_{\lambda\nu]}=0 \tag{67}$$

$$\partial_\nu\mathcal{G}^{\lambda\nu}=\mathcal{C}^\lambda. \tag{68}$$

The only difference with respect to more customary versions is that $\mathcal{G}^{\lambda\nu}$ is regarded as a density of weight $+1$, which is really in keeping with the true physical nature of the quantities involved, because the four-vector of the charge and current density $\mathcal{C}^\lambda$ is at least spatially a true density. The customary versions $\mathcal{G}^{\lambda\nu}=g^{1/2}G^{\lambda\nu}$ and $\mathcal{C}^\lambda=g^{1/2}c^\lambda$ (g=determinant of the metric) do not make this physical feature of the fields explicit. The derivatives in the Eqs. (67) and (68) are ordinary partial derivatives not covariant derivatives.

Van Dantzig (1934), who later rediscovered this interesting property of the Maxwell equations, further developed this into a method, which might be called the method based on the principle of metric independence. An interesting dimensional substantiation of van Dantzig's method was later given by Dorgelo and Schouten (1946).

Van Dantzig (1934) also introduced constitutive relations between $\mathcal{G}^{\lambda\nu}$ and $F_{\lambda\nu}$ and noted that in general they have the form of integral relations in order to express the noninstantaneous and nonlocal relations between applied fields and polarizations.

The most general linear algebraic relations that can occur between $\mathcal{G}^{\lambda\nu}$ and $F_{\lambda\nu}$ are

$$\mathcal{G}^{\lambda\nu}=\tfrac{1}{2}\chi^{\lambda\nu\sigma\kappa}F_{\sigma\kappa}, \tag{69}$$

where $\chi^{\lambda\nu\sigma\kappa}$ is called the constitutive tensor. [This tensor obeys the symmetry properties $\chi^{\lambda\nu\sigma\kappa}=-\chi^{\nu\lambda\sigma\kappa}=\chi^{\sigma\kappa\lambda\nu}$. [Chapter VI of Post (1962) gives a detailed discussion.]

The first Maxwell equation as usual implies that $F_{\lambda\nu}$ can be derived from a potential vector A_ν according to

$$F_{\lambda\nu}=2\partial_{[\lambda}A_{\nu]}. \tag{70}$$

Substitution of (70) in (69) and (69) in (68) yields the *generally invariant vector d'Alembertian* (*wave equation*)

$$\partial_\nu\chi^{\lambda\nu\sigma\kappa}\partial_\sigma A_\kappa=0, \tag{71}$$

where we have assumed $\mathcal{C}^\lambda=0$.

The derivatives in Eq. (71) are ordinary partial derivatives, not covariant derivatives. Equation (71) is nevertheless valid for any curvilinear system of coordinates, provided we transform χ as implied by the invariance of Eq. (69), that is, χ is a tensor density.

We may now use Eq. (71) for a physical optical analysis of the Sagnac effect in free space and in a medium, whereby we also consider the case where the medium rotates with the mirror system as well as the case where the medium is stationary while the mirrors rotate and finally the case where the mirrors are stationary but the medium rotates.

As in the geometric optic treatment, there are two ways of attacking the problem. One writes the Eqs. (71) for an inertial frame of reference whereby the boundary conditions become time dependent due to the motion of the mirrors and the beam splitter (wave launcher), or one computes Eq. (71) for a rotating frame where the boundary conditions in the rotating frame retain their familiar time-independent form. We follow the latter approach here.

This program makes it necessary to evaluate the coefficients of the constitutive tensor for moving frames of reference and for moving media, which brings up the most crucial and incisive distinctions between the theory of uniformly translating and nonuniformly moving systems.

For the theory of the uniformly translating systems it is immaterial whether one considers the medium to be moving with respect to the frame of reference of the observer or whether one considers the frame of refer-

ence to be moving with respect to the medium, because a translatory motion does not generate any intrinsic physical changes in the body as long as the translation is uniform.

For nonuniformly moving systems it is mandatory to distinguish between the motion of the object (medium), and the motion of the observer (frame of reference). The principle of relativity breaks down for nonuniform motion. A nonuniform motion produces a real and intrinsic physical change in the object in motion; the motion of the frame of reference by contrast produces solely a difference in the observational viewpoint.

We may substantiate the above statements shortly by giving three rather well-known examples that clearly demonstrate the physical necessity of distinguishing between the nonuniform motions of the object and the observer.

We will see that the uniform or nonuniform motions of the observer are covered by the principle of general covariance and the tensorial behavior of the fields for general space–time transformations. This purely observational change in point of view does not generate any intrinsic physical changes in the object.

A nonuniform motion of an object that is under observation from a frame of reference, inertial or noninertial, produces real intrinsic physical changes in that object. For instance a rotating disk becomes electrically polarized in the radial direction. A rotating magnetizable bar becomes magnetized in its axial direction (Barnett experiment), although neither the disk nor the bar shows any field whatsoever when at rest in an inertial frame. These fields are produced by rotation where initially, when at rest, there was no field at all. This is a typically nontensorial feature which could not possibly be covered by an indiscriminate application of the principle of general covariance in conjunction with the known tensorial characteristics of the electromagnetic field.

The three examples which clearly illustrate this necessary distinction for nonuniform motion are:

(1) The Barnett (1915) experiment, rotating the magnetizable bar or rotating the frame of reference instead of the bar are clearly different operations from a physical point of view. Rotation of the bar gives magnetization; rotation of the frame of reference does not.

(2) The Oppenheimer paradox (Schiff, 1939): rotating a charged spherical condenser or rotating the frame of reference instead of the condenser are physically different operations. Rotation of the condenser produces an external magnetic field; rotation of the frame of reference does not.

(3) The rotational Fresnel–Fizeau experiment (medium rotating, mirrors stationary) and the Dufour–Prunier (1942) experiment (medium stationary mirrors rotating) are physically not equivalent [compare the discussion of Eqs. (65) and (66) of Sec. IV of this paper].

B. Constitutive Relations for Rotating Systems

In the previous discussion a major point was made of the fact that the intrinsic properties of a medium can be affected by a rotation. This implies that the constitutive properties when measured while observer and medium both are at rest in the same rotating frame are not exactly the same as those observed when observer and medium both are at rest in the same inertial frame. In a rotating body, a radial polarization is deflected by Coriolis forces, thus causing a change in the axial magnetization, and vice versa. It is known, however, that the magnetization of optical materials is negligible for all practical purposes. Thence, if we neglect the not easily calculable intrinsic influence of the rotation on the medium, we may expect the results of the physical optical analysis to be consistent with the results of the geometric optical analysis, for all media with $\mu_r=1$.

To obtain Eqs. (71) for the rotating frame, it is necessary to express the constitutive tensor χ with respect to the rotating frame. To do this one must have a frame of reference for which χ is known. The free-space case is simple enough, χ on a Cartesian inertial frame is given by

$$\begin{array}{c|cc} \chi^{\lambda\nu\sigma\kappa} & \mathbf{E} & \mathbf{B} \\ \hline -\mathbf{D} & -\epsilon_0 & 0 \\ \mathbf{H} & 0 & 1/\mu_0 \end{array} . \tag{72}$$

Similarly for an isotropic medium with relative permittivity ϵ_r, relative permeability μ_r, and at rest in an inertial frame, we have

$$\begin{array}{c|cc} \chi^{\lambda\nu\sigma\kappa} & \mathbf{E} & \mathbf{B} \\ \hline -\mathbf{D} & -\epsilon_0\epsilon_r & 0 \\ \mathbf{H} & 0 & 1/(\mu_0\mu_r) \end{array} . \tag{73}$$

For the following applications it is necessary to separate the constitutive tensor χ into its "free-space" part and the part due to the polarizability of the medium, "the material part," because depending on the physical situation each part may be known in different frames.

The free-space part of χ which is known to have the form (72) in an inertial frame, when seen from a rotating frame, must now be transformed. For a Galilei rotation of rate Ω around the Z axis, *while*

simultaneously making a transition to cylindrical coordinates, one has:

Free Space Observed from Rotating Frame

$\chi^{\lambda\nu\sigma\kappa}$	E_r	E_ϕ	E_z	B_r	B_ϕ	B_z
$-D_r$	$-\epsilon_0 r$	0	0	0	0	$r\Omega\epsilon_0$
$-D_\phi$	0	$-\epsilon_0/r$	0	0	0	0
$-D_z$	0	0	$-\epsilon_0 r$	$-r\Omega\epsilon_0$	0	0
H_r	0	0	$-r\Omega\epsilon_0$	$1/(\mu_0 r)$	0	0
H_ϕ	0	0	0	0	r/μ_0	0
H_z	$r\Omega\epsilon_0$	0	0	0		$1/(\mu_0 r)$

(74)

The case of the stationary material medium, which in the stationary frame is given by (73), is converted into (75) when seen from a rotating frame of cylindrical coordinates. To obtain (75) it is only necessary to replace ϵ_0 by $\epsilon_r\epsilon_0$ and μ_0 by $\mu_0\mu_r$ in (74).

Stationary Medium Observed from Rotating Frame

$\chi^{\lambda\nu\sigma\kappa}$	E_r	E_ϕ	E_z	B_r	B_ϕ	B_z
$-D_r$	$-r\epsilon_0\epsilon_r$	0	0	0	0	$r\Omega\epsilon_0\epsilon_r$
$-D_\phi$	0	$-\epsilon_0\epsilon_r/r$	0	0	0	0
$-D_z$	0	0	$-r\epsilon_0\epsilon_r$	$-r\Omega\epsilon_0\epsilon_r$	0	0
H_r	0	0	$-r\Omega\epsilon_0\epsilon_r$	$1/(\mu_0\mu_r r)$	0	0
H_ϕ	0	0	0	0	$r/(\mu_0\mu_r)$	0
H_z	$r\Omega\epsilon_0\epsilon_r$	0	0	0	0	$1/(\mu_0\mu_r r)$

(75)

Where we have transformed free-space and medium part together it should be clear that (75) describes the case where the medium is stationary in the inertial frame and the whole thing (inertial free space and material medium) is observed from the rotating frame. This corresponds to the Dufour–Prunier experiment discussed earlier in Secs. II and IV.

Now let us suppose that the medium rotates with the mirrors. It would then be wrong to transform the material part of χ because the medium is stationary in the frame of reference, although there may occur intrinsic changes of the material part which may be neglected for $\mu_r=1$. The free-space part of the constitutive tensor, which in the inertial frame is given by (72), when viewed from the rotating frame is still given by (74). It then follows for the corotating material medium, if we neglect the intrinsic changes of the material part:

Corotating Medium, Intrinsic Changes of Material Part Neglected

$\chi^{\lambda\nu\sigma\kappa}$	E_r	E_ϕ	E_z	B_r	B_ϕ	B_z
$-D_r$	$-r\epsilon_0\epsilon_r$	0	0	0	0	$+r\Omega\epsilon_0$
$-D_\phi$	0	$-\epsilon_0\epsilon_r/r$	0	0	0	0
$-D_z$	0	0	$-r\epsilon_0\epsilon_r$	$-r\Omega\epsilon_0$	0	0
H_r	0	0	$-r\Omega\epsilon_0$	$1/(\mu_0\mu_r r)$	0	0
H_ϕ	0	0	0	0	$r/(\mu_0\mu_r)$	0
H_z	$+r\Omega\epsilon_0$	0	0	0	0	$1/(\mu_0\mu_r r)$

(76)

In the same way we can obtain the constitutive tensor for the rotating medium while it is being observed by a stationary interferometer (Fresnel–Fizeau effect). The observation being made in an inertial frame implies that the free-space part retains the form (72); the medium part on the rotating frame has the form $\epsilon_0(\epsilon_r-1)$ and $\mu_0(\mu_r-1)$ if we again discard the intrinsic changes. When the rotating medium is viewed from the inertial frame, however, one obtains off-diagonal terms, because the inertial frame observer rotates in the opposite direction with respect to the medium that is in absolute motion. Adding the unaffected free-space part one finds:

Rotating Medium Viewed from Inertial Frame, Intrinsic Changes Neglected

$\chi^{\lambda\nu\sigma\kappa}$	E_r	E_ϕ	E_z	B_r	B_ϕ	B_z
$-D_r$	$-r\epsilon_0\epsilon_r$	0	0	0	0	$-r\Omega\epsilon_0(\epsilon_r-1)$
$-D_\phi$	0	$-\epsilon_0\epsilon_r/r$	0	0	0	0
$-D_z$	0	0	$-r\epsilon_0\epsilon_r$	$r\Omega\epsilon_0(\epsilon_r-1)$	0	0
H_r	0	0	$r\Omega\epsilon_0(\epsilon_r-1)$	$1/(r\mu_0\mu_r)$	0	0
H_ϕ	0	0	0	0	$r/\mu_0\mu_r$	0
H_z	$-r\Omega\epsilon_0(\epsilon_r-1)$	0	0	0	0	$1/(r\mu_0\mu_r)$.

(77)

A few remarks may be appropriate with regard to the physical meaning of the constitutive relations implied by (74), (75), (76), and (77). In the next section we will see that (74) leads to the familiar Sagnac result in vacuum, while (75), (76), and (77) will lead to results identical to those obtained earlier, provided $\mu_r=1$. For the free-space case it seems a legitimate question whether a cross-effect as suggested by (74) really exists. It is important to note that (72) is invariant under a Lorentz transformation; the cross relation between electric and magnetic field suggested by the off-diagonal terms in (74) would thus be typical for a rotational motion.

Pegram (1917) performed an experiment that seems to give some relevant information of how these off-diagonal terms can be observed. He rotates, simultaneously and around the same axis, a coaxial cylindrical condenser and solenoid. The solenoid is energized and gives a magnetic field in the axial direction between the plates of the condenser. A temporary shorting of the plates while rotating, will give a charge to the condenser [according to the upper right hand term in (74)]. This charge can be observed by breaking the short again. Then the rotation can be stopped because the charge is now trapped on the condenser. An electrometer measurement shows that the charge indeed exists while its magnitude is of the order given by the off-diagonal term of (74). Pegram performed this experiment to clear up certain questions in the realm of unipolar induction. (See also Kennard 1917.)

This cross relation, between electric and magnetic fields for rotating frames in vacuum, does not occur if one applies the Lorentz-like transformation (29) to describe a rotation. It is not difficult to anticipate this conclusion, because the free-space form of the constitutive tensor (72) is (by definition) invariant for an actual Lorentz transformation. The outcome of Pegram's experiment thus gives further corroborative evidence in favor of transofrmation (11) for the description of rotations.

C. The Wave Equations

Substitution in (71) of the explicit forms (74), (75), (76), and (77) leads to sets of wave equations that apply to the different situations represented by these specific forms of the constitutive tensor. Comparison of the tensor forms [(74) to (77)] shows that they are all of the same form with the Ω-dependent terms occurring in the off-diagonal terms only. To obtain a solution that is also valid in the realm of geometric optical approximations, we start with the assumption that the r and z dependences vanish, which means that we consider a circular beam that is characterized by a ϕ dependence only for a given fixed $r=R$. The substitution of (74) in (71) then leads to the following set of partial differential equations:

$(\lambda=0)$

$$-\frac{\epsilon_0}{R}\frac{\partial^2}{\partial\phi\partial t}A_\phi+\frac{\epsilon_0}{R}\frac{\partial^2}{\partial\phi^2}A_0=0,$$

$(\lambda=1)$

$$R\epsilon_0\frac{\partial^2}{\partial t^2}A_r+2R\Omega\epsilon_0\frac{\partial^2}{\partial\phi\partial t}A_r-\mu_0^{-1}R\frac{\partial^2}{\partial\phi^2}A_r=0,$$

$(\lambda=2)$

$$-\frac{\epsilon_0}{R}\frac{\partial^2}{\partial\phi\partial t}A_0+\frac{\epsilon_0}{R}\frac{\partial^2}{\partial t^2}A_\phi=0,$$

$(\lambda=3)$

$$R\epsilon_0\frac{\partial^2}{\partial t^2}A_z+2R\Omega\epsilon_0\frac{\partial^2}{\partial\phi\partial t}A_z-(\mu_0R)^{-1}\frac{\partial^2}{\partial\phi^2}A_z=0.$$

(78)

Inspection of Eqs. (78) shows that the equations for $\lambda=1$ and $\lambda=3$ are identical wave equations in the components A_r and A_z, respectively. The other two equations $\lambda=0$ and $\lambda=2$ are restrictions similar to the Lorentz gauge condition. They relate two remaining components of the four-potential A_ϕ and A_0.

These two equations are dependent because they can be written in the form

$$(\lambda=0)\quad (\partial/\partial\phi)\{(\partial/\partial\phi)A_0-(\partial/\partial t)A_\phi\}=0,$$

$$(\lambda=2)\quad (\partial/\partial t)\{(\partial/\partial\phi)A_0-(\partial/\partial t)A_\phi\}=0. \quad (79)$$

A_0 is the component usually called the scalar potential.

For this simple case we have thus a complete separation of the components and we may therefore consider the single wave equation

$$\epsilon_0\mu_0(\partial^2/\partial t^2)\psi+2\Omega R\epsilon_0\mu_0(\partial^2\psi/\partial s\partial t)-(\partial^2/\partial s^2)\psi=0, \quad (80)$$

in which ψ can be A_z or A_r. A new coordinate, $s=\phi R$, measures the distance along the periphery of the circle on which the light beams travel.

The wave equation (80) is a vibrating string type of equation except for the nonreciprocal term $2\Omega R\epsilon_0\mu_0\partial^2\psi/\partial s\partial t$. To obtain a solution we may consider the case of the self-oscillating ring laser. The boundary condition corresponding to the self-oscillating case requires that the solutions be single-valued when going around the ring; this means that the circumference of the circle $2\pi R$ should represent an integral number of wavelengths. A substitution of

$$\psi=\exp[i(\omega t+ks)] \quad (81)$$

in Eq. (80) yields

$$\epsilon_0\mu_0\omega^2+2\Omega R\epsilon_0\mu_0\omega k-k^2=0, \quad (82)$$

which is a quadratic equation in ω with solutions

$$\omega_{1,2}=R\Omega k\pm kc[1+(\Omega R/c)^2]^{1/2}. \quad (83)$$

The square root gives a higher-order correction and should therefore be equated to one, because terms of the order $(\Omega r/c)^2$ are already neglected in the evaluation of the transformed constitutive tensor (74). It follows from (83) that the difference between the absolute values of ω_1 and ω_2 becomes

$$\Delta\omega=|\omega_2|-|\omega_1|=2R\Omega k, \quad (84)$$

where the wave number k is the same for the clockwise and counterclockwise modes. For the stationary loop we can write $k=\omega_0/c$ where ω_0 is the single resonant frequency of the stationary loop. The frequency splitting due to the rotation can thus be written

$$\Delta\omega/\omega_0=2R\Omega/c, \quad (85)$$

with $R\Omega=v$, the peripheral velocity of the loop.

Comparison with Eq. (51) for $\alpha=0$, $n=1$, and the beam following a circular path, shows that (51) and (85) lead to identical results.

A similar procedure for the form (76) of the constitutive tensor, which represents the case of a corotating medium, gives for the wave equation

$$\epsilon\mu(\partial^2\psi/\partial t^2)+2\Omega R\epsilon_0\mu(\partial^2\psi/\partial s\partial t)-(\partial^2/\partial s^2)\psi=0. \quad (86)$$

Substituting the solution (81) one obtains the quadratic equation

$$\epsilon\mu\omega^2+2\Omega R\epsilon_0\mu\omega k-k^2=0, \quad (87)$$

which leads to the frequency difference

$$\Delta\omega=2\Omega Rk/\epsilon_r, \quad (88)$$

with ϵ_r the relative permittivity of the medium. Now $k=\omega_0 n/c$, where $n=(\epsilon_r\mu_r)^{1/2}$ is the index of refraction of the medium. Substitution in (88) gives

$$\Delta\omega/\omega_0=2(R\Omega/c)(\mu_r/\epsilon_r)^{1/2}. \quad (89)$$

Comparison with (51), which was obtained by the geometric optical procedure, shows that if we take a circular path of radius R and $\alpha=1-1/n^2$

$$\Delta\omega/\omega_0=2R\Omega/(nc). \quad (90)$$

The equations (89) and (90) become identical if $\mu_r=1$.

The other two possibilities with constitutive forms (75) and (77) are treated in precisely the same manner. For the form (75) the final result agrees excactly with the result obtained from formula (54), which corresponds to a self-oscillating version of the Prunier–Dufour interferometer experiment. The actually observed results have to be corrected for the necessary air gap between the moving mirrors and the stationary medium.

The form (77), mirrors stationary and medium rotating, leads to what may be considered the rotational analog of the translational Fresnel–Fizeau experiment. The results obtained from (77) agree with results obtained from (56) provided $\mu_r=1$. The latter restriction is due to not explicitly accounting for the intrinsic changes in the rotating material.

An electromagnetic analysis of the Sagnac effect was first given by Gordon (1923). His analysis of the free-space case is the exact "wave" counterpart of Langevin's kinematical approach based on the space–time line element. The treatment presented here is mathematically equivalent to Gordon's, but only for the free-space case.

Gordon used a modified metric for the case of a refracting medium in the light beam. This part of Gordon's treatment can only have an *ad hoc* meaning because the ten coefficients of the metric are not adequate to accommodate the maximum of 20 coefficients of the constitutive tensor characterizing a general electromagnetic medium.

Heer (1964) uses a complete set of constitutive relations instead of a modified metric for describing the

properties of a refracting medium in the beam path. No procedure is given for obtaining the constitutive coefficients for the different arrangements of mirror motion and medium motion such as the Dufour–Prunier (1942) arrangement and the rotational analog of the Fresnel–Fizeau experiment.

The electromagnetic procedure presented here was first sketched by Post and Yildiz (1965) and subsequently treated in more detail by Yildiz and Tang (1966).

The final relations for the Sagnac effect are deceptively simple so that one can easily suggest very simple alternatives for obtaining the same first order results. Langevin (1921) had already noted the ambiguity in transformational procedure for obtaining the first-order results (see Sec. III). The significance of the higher-order terms, although experimentally negligible, can be considerable from a theoretical point of view. By also demanding higher-order consistency between comparable kinematical and electromagnetic procedures one may uncover further guidelines for the development of the electromagnetic theory of nonuniformly moving systems.

VI. SUMMARY

The Sagnac effect has been reviewed and discussed against the background of other related optical and mechanical phenomena that can also be used for sensing absolute rotation. In a review of the experimental work on Sagnac-type interferometers, the work of Michelson, Sagnac, Harress, Pogany, Michelson and Gale, and Dufour and Prunier has been discussed in a more or less chronological order. The recent work by Macek and Davis on the self-oscillating version of the Sagnac optical loop, presently known as the ring laser, has also been included.

Alternatives for theoretically analyzing the Sagnac effect have been discussed in Sec. III. The kinematical approach has been applied to the simple model of a circular optical circuit and then carried through in full detail incuding associated higher-order effects when observations are made either in the stationary or in the rotating frame. This analysis has led to a transformation for describing rotations such that the time dilation, which is also an established phenomenon for nonuniform motion, has been properly accounted for. This transformation reduces to an ordinary Galileian rotation if the results are restricted to first orders in the rate of rotation Ω.

A more detailed first-order analysis of Sagnac-type interferometers and ring lasers with optical circuits of arbitrary shape has been presented in Sec. IV. This analysis includes the cases where the light beam travels through a refracting medium. The most prominent experimental arrangements have been discussed quantitatively: medium and interferometer rotating; medium at rest, interferometer rotating; medium rotating, interferometer at rest. Because the principle of relativity does not apply to nonuniform motions, it has been shown that the latter two experiments are different. They would reduce to one and the same experiment (Fresnel–Fizeau) if the motion were a uniform translation.

A completely electromagnetic analysis of the Sagnac effect has been attempted in Sec. V. The application of electromagnetic theory to rotating systems requires some drastic organizational changes of the theory, the most important of which is that the properties of free space are also made explicit in a set of constitutive equations. The constitutive relations on a rotating frame exhibit a cross-coupling between electric and magnetic fields. This cross-coupling is responsible for the occurrence of the Sagnac effect in free space, whereas actual, direct observations of the cross effect have been made by Pegram. The electromagnetic theory in the geometric optical limit leads to exactly the same results as the kinematical approach for all those cases where the material medium is absent or stationary. For the cases where the medium is not stationary one has to take into account the intrinsic changes taking place in the medium as a result of the rotation. The intrinsic change of the medium can be assumed to be negligible for all materials with a relative permeability $\mu_r=1$. The results of the electromagnetic approach in the geometric optical limit are then in full agreement with the kinematical approach.

ACKNOWLEDGMENTS

The author is indebted to Dr. L. M. Hollingsworth (AFCRL) for many discussions as well as for his help and wise insistence on making a thorough study of the literature.

I had some enlightening discussions with Professor J. G. King and J. Brenner (MIT) on the subject of experimentation on unipolar induction.

D. D. Guidice, P. H. Picard, and F. J. Zucker (AFCRL) are greatfully acknowledged for reading major parts of the manuscript and for their suggestions on how to improve the presentation.

APPENDIX

Consider a Lorentz transformation with a mutual velocity of translation that is arbitrarily oriented with respect to the coordinate axis:

$$t_0=(t+\mathbf{v}\cdot\mathbf{r}/c^2)\gamma$$
$$\mathbf{r}_0=\mathbf{r}_0-\mathbf{v}[(1-\gamma)(\mathbf{v}\cdot\mathbf{r}/v^2)-\gamma t]. \qquad \text{(A1)}$$

Now consider a rotating disk with two Lorentz frames having a common origin located on the disk's axis of rotation. One frame is taken to be stationary with respect to the disk's axis of rotation while the other

translates with a velocity equal to the instantaneous velocity $\mathbf{v}$ of some point $\mathbf{r}$ of the disk. That point $\mathbf{r}$ then satisfies the equation $\mathbf{v}\cdot\mathbf{r}=0$ as does each point on the disk when related to its own velocity. For the equation $\mathbf{v}\cdot\mathbf{r}=0$ the Lorentz transformation (A1) reduces to

$$t_0=\gamma t$$

$$\mathbf{r}_0=\mathbf{r}+\gamma\mathbf{v}t \tag{A2}$$

and for differentials one has

$$dt_0=\gamma dt$$

$$d\mathbf{r}_0=d\mathbf{r}+\gamma\mathbf{v}dt. \tag{A3}$$

The changes that can be envisioned for a "rigid" rotation obey the relations

$$d\,|\,\mathbf{r}\,|\,=d\,|\,\mathbf{r}_0\,|\,=0,$$

$$d\mathbf{r}_0=rd\phi_0,$$

$$d\mathbf{r}=rd\phi, \tag{A4}$$

with ϕ_0 and ϕ the azimuthal angles and r the radius of the polar coordinates associated with the two frames. If Ω is the rate of angular rotation, the relative velocity v between the two frames is given by

$$v=\Omega r. \tag{A5}$$

A substitution of Eq. (A4) and (A5) in Eq. (A3) yields the infinitesimal transformation

$$dt_0=\gamma dt,$$

$$dr_0=dr,$$

$$d\phi_0=d\phi+\gamma\Omega dt, \tag{A6}$$

which is the same as Eq. (24) if we stipulate that t_0, r_0, and ϕ_0 represent the inertial frame.

The transformation (A6) will, in general, represent a nonintegrable relation between the differentials of the coordinates. This nonintegrability or anholonomity stems from the requirements of rigidity (A4).

To obtain the inverse transformation one solves (A6). Then

$$dt=\gamma^{-1}dt_0,$$

$$dr=dr_0,$$

$$d\phi=d\phi_0-\gamma\Omega dt,$$

$$=d\phi_0-\Omega dt_0.$$

Notice that this result, unlike that of the Lorentz transformation, cannot be obtained by a simple inversion of the velocity sign. In fact the position of the factors γ in (A6) and (A7) allows us to distinguish between transformations from an inertial to a rotating frame and vice versa.

A comparison of (A6) and (A7) shows that there is a difference $\Delta\Omega$ between the rates of rotation as observed in the inertial and rotating frames.

$$\Delta\Omega=(\gamma-1)\Omega. \tag{A8}$$

This difference corresponds to a change in time "measure" associated with a "centrifugal" potential, similarly as the change in time "measure" that is associated with a gravitational potential.

Equation (A8) gives the Thomas precession for a circular path.

BIBLIOGRAPHY

Barnett, S. J., 1915, Phys. Rev. **6**, 239.
Brandstatter, J. J., 1963, *Waves, Rays and Radiation in Plasmas* (McGraw-Hill Book Co., Inc., New York), p. 272.
Cartan, E., 1924, Ann. Ec. Norm. **41**, 1.
Dorgelo, H., and Schouten, J. A., 1946, Proc. Amsterdam Acad. **40**, 124, 282, 394.
Dufour, A., and Prunier, F., 1937, Compt. Rend. **204**, 1322.
——, and Prunier, F., 1942, J. Phys. Radium, 8th Ser. **3**, 153.
Einstein, A., 1914, Astron. Nachr. **199**, 9 and 47.
Fock, V., 1959, *The Theory of Space, Time and Gravitation* (Pergamon Press, Inc., New York).
Gordon, W., 1923, Ann. Physik **22**, 421.
Harress, F. 1911, thesis, Jena (unpublished).
Harzer, P., 1914, Astron. Nachr. **198**, 378.
——, 1914, Astron. Nachr. **199**, 10.
Heer, C. V., 1964, Phys Rev. **134A**, 799.
Kennard, E. H., 1917, Phil. Mag. **33**, 179.
Kromykh, A. T., 1966, Zh. Eksperim. i Teor. Fiz. **50**, 281 [English transl.: Soviet Phys.—JETP **23**, 185 (1966)].
Langevin, P., 1921, Compt. Rend. **173**, 831.
——, (1937), Compt. Rend. **205**, 51.
Macek, W., and Davis, D., 1963, Appl. Phys. Letters **2**, 67. [For a recent review of ring laser work plus a bibliography on ring lasers see W. M. Macek and E. J. McCartney, Sperry Eng. Rev. **19**, 8 (1966).]
Madelung, E., 1943, *Mathematical Tools for the Physicist* (Springer-Verlag, Berlin), p. 129.
Metz, A., 1952, J. Phys. Radium **13**, 224.
——, 1952, Compt. Rend. **234**, 597.
——, 1952, Compt. Rend. **234**, 705.
Michelson, A. A., and Morley, E. W., 1886, Am. J. Sci. **31**.
——, and Morley, E. W., 1887, Am. J. Sci., 3rd Ser. **34**, 333.
——, and Morley, E. W., 1887, Phil. Mag. **24**, 449.
——, 1897, Am. J. Sci., 4th Ser. **18**, 475.
——, and Gale, H. G., 1925, Nature **115**, 566.
——, and Gale, H. G., 1925, Astrophys. J. **61**, 137.
Pegram, G. B., 1917, Phys. Rev. **10**, 591.
Poeverlein, H., 1962, Phys. Rev. **128**, 956.
Pogany, B., 1926, Ann. Physik **80**, 217.
——, 1928, Ann. Physik **85**, 244.
Post, E. J., 1962, *Formal Structure of Electromagnetics* (North-Holland Publ. Co., Amsterdam).
——, and Yildiz, A., 1965, Phys. Rev. Letters **15**, 177.
Rosenthal, A. H., 1962, J. Opt. Soc. Am. **52**, 1143.
Sagnac, G., 1913, Compt. Rend. **157**, 708, 1410.
——, 1914, J. Phys. Radium, 5th Ser. **4**, 177.
Schiff, L. I. 1939, Proc. Natl. Acad. Sci. U.S. **25**, 391.
Trocheris, M. G., 1949, Phil. Mag. **40**, 1143.
Van Dantzig, D., 1934, Proc. Cambridge Phil. Soc. **30**, 421.
——, 1934, Proc. Amsterdam Acad. **37**, 521, 526, 644, 825.
von Luue, M., 1920, Ann. Phys. **62**, 448.
Weyl, H., 1951, *Space-Time-Matter* (Dover Publication, Inc., New York).
Yildiz, A., and Tang, C. H., 1966, Phys. Rev. **146**, 947.
Zernike, F., 1947, Physica **13**, 279.